Tamagawa

Compact & High-accuracy

IMU

Inertial Measurement Unit

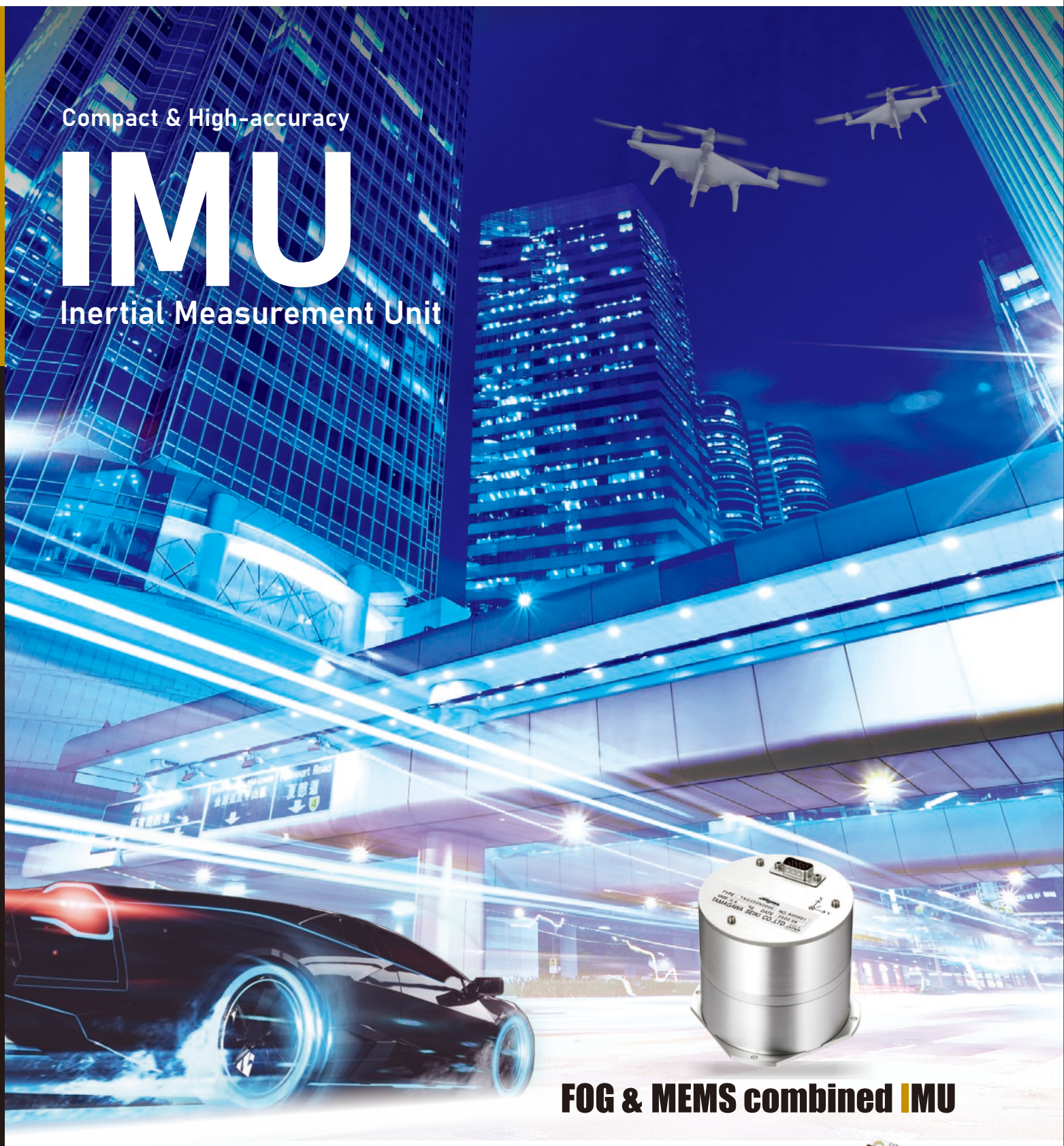

FOG & MEMS combined IMU

TAG300

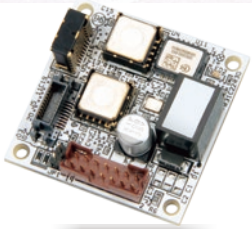

AU7684

TAMAGAWA SEIKI CO., LTD.

MEMS IMU i-FOG

Inertial Measurement Unit (IMU) is an electronic device that measures various kinds of motions in vehicle dynamics, attitude (roll & pitch) or heading (yaw) angle.
In addition, it is an essential technology in autonomous driving for localization and dead-reckoning. Tamagawa Seiki Co., Ltd. offers wide range of product, such as MEMS Gyro, FOG or AHRS. We provide the best option for your application.

01 Automobile

IMU measures vehicle dynamics, attitude (roll & pitch) or heading (yaw) angle. In addition, it is used for autonomous driving by combining GNSS.

02 Unmanned Construction Machine

IMU offers stable output under large vibration by utilizing gyroscope and accelerometer.

03 Unmanned Agricultural Machine

IMU detects attitude (roll & pitch) and heading (yaw) angle of agricultural tractor. In addition, it is used for autonomous driving by combining GNSS.

04 Security Robot

IMU is used for attitude control in security robot.

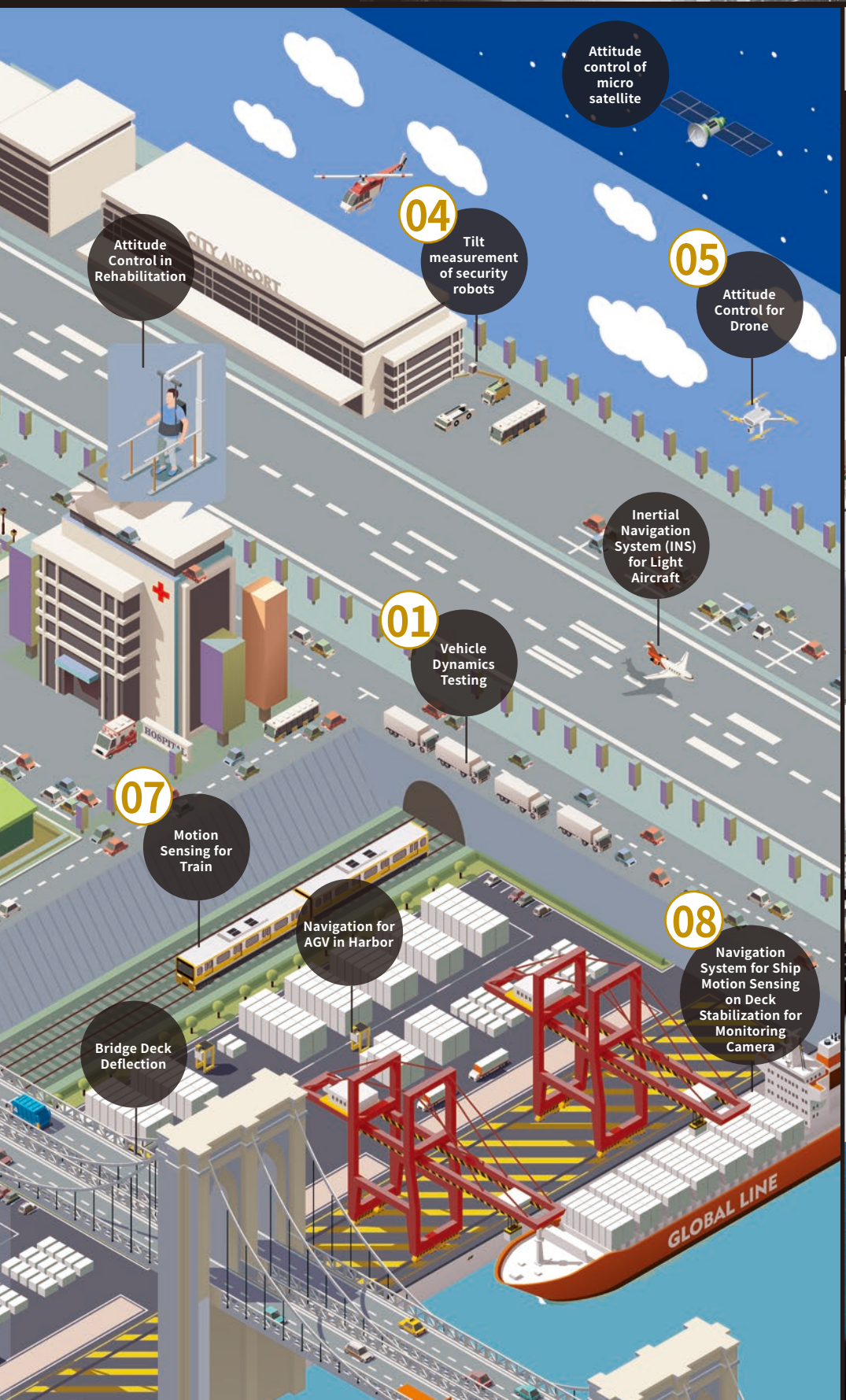

05 Drone

IMU is used for attitude control in drone.

06 Automated Guided Vehicle (AGV)

Gyroscope is used for AGV Magnetic Guidance to secure high running stability.

07 Train

IMU detects angular velocity and acceleration to measure the comfort level of a train with GPS location information.

08 Ship

IMU is used for inertial navigation and motion detection of ships.

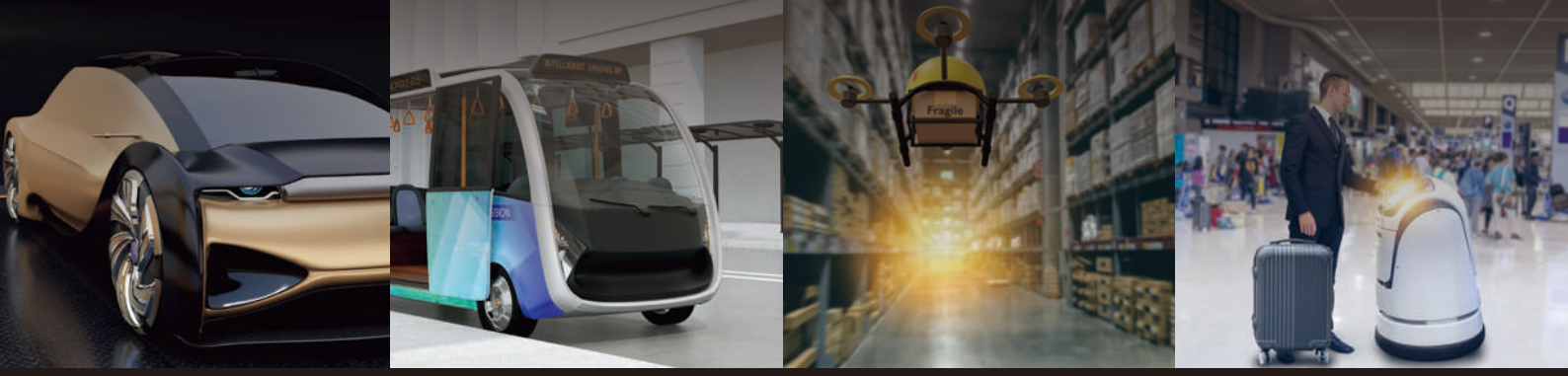

FOG & MEMS combined IMU

Accuracy for full autonomous driving

FOG & MEMS combined IMU incorporates 3-axis gyro (i-FOG for Z axis, MEMS gyro for X and Y axis) and accelerometers, which measure angular velocity and acceleration. In addition, attitude (roll & pitch) and heading (yaw) is calculated. An external GNSS module is connected to IMU; with position and speed data, IMU can be used as GNSS / INS / VS navigation.

New Synergy created in combination with MEMS & FOG

Fiber Optic Gyro
i-FOG

Heading **0.1°/h**

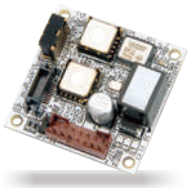

MEMS IMU

Attitude **0.1°**

FOG & MEMS combined IMU

New IMU : Bridging the Gap between cost and accuracy

The accuracy of Gyroscope is classified by principle of operation. The customer needs to choose the suitable gyroscope depending on application or environment. FOG & MEMS combined IMU is a newly developed IMU with the concept of filling in the gap of cost and accuracy.

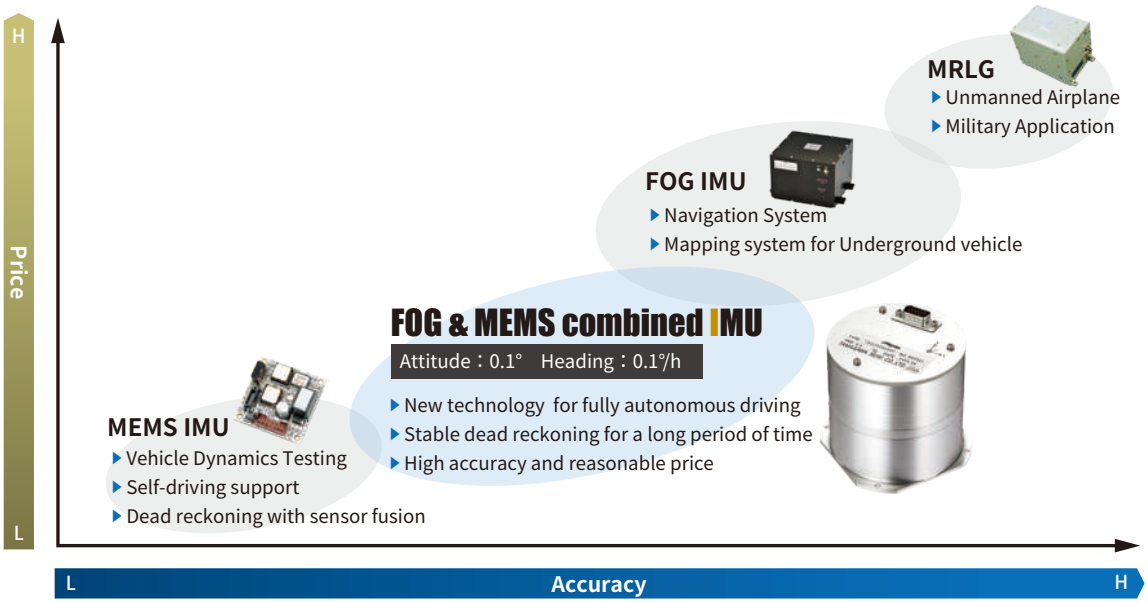

Accuracy of Self-localization

Through the use of GNSS with centimeter-level positioning accuracy, fully autonomous driving will come closer to realization. However, the accuracy of localization is worsened in Tunnel or Multipath propagation. Gyroscope is used in those conditions. In dead reckoning, position data is estimated by integral of gyroscope, odometer and accelerometer. Depending on the accuracy of gyroscope, errors of heading is accumulated. Therefore, high accuracy gyroscope is needed for dead reckoning.

Variation of position error of gyros with different accuracy

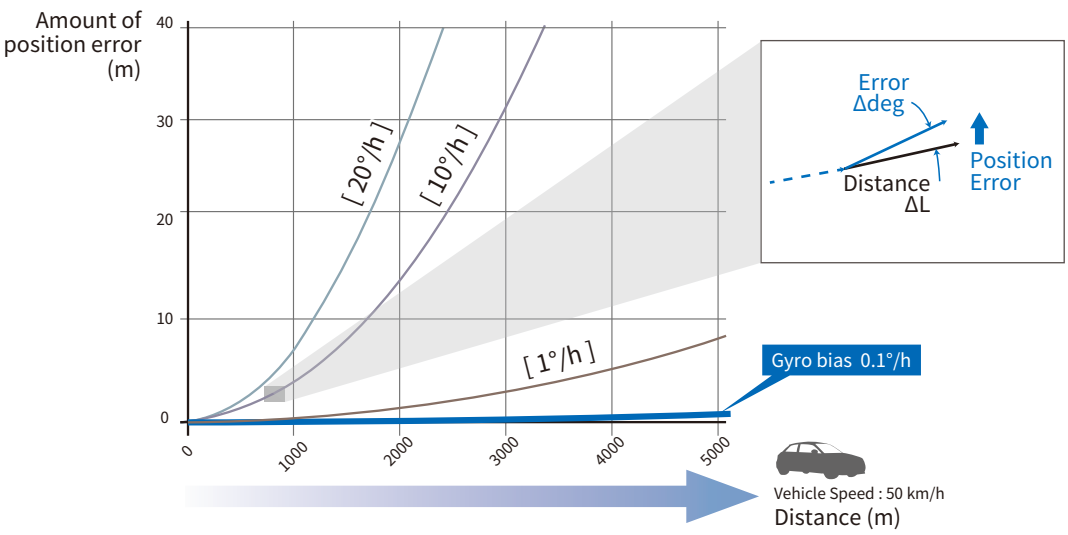

PART NUMBER

FOG & MEMS combined IMU

TAG350N 2□□□

Calculation ※1	Accelerometer	Custom
2：GNSS / INS / VS combined Navigation	0：Accelerometer±3G 1：Accelerometer±6G	00：Standard Others : Exclusive

※1 Please refer to page 15, 16 for the details of operation mode.

PERFORMANCE

FOG & MEMS combined IMU

Item	Specification	Remark
Dimension	85× 85 × 78.5 mm	
Power supply voltage	9 ～ 28V DC	
Interface/ Baud rate	RS232C：115.2 kbps（fixed) CAN：500kbps (Initial setting)	
Output Cycle	RS232C：50Hz CAN：50Hz	
Gyro Range	± 200deg/sec	
Gyro Bias	Z axis：0.1 deg/h rms X , Y axis：0.2 deg/s rms	
Gyro Scale Factor Error	Z axis：50ppm FS rms X , Y axis：0.2% FS rms	SF : Scale Factor FS : Full Scale

Item	Specification	Remark
Acceleration Range	± 3G / ± 6G	
Acceleration Bias	5mG rms	
Acceleration Scale Factor Error	0.2%FS rms	
Static Accuracy (Roll & Pitch)	0.1deg rms	Room temp.
	0.2deg rms	Ambient temp.
In-run Drift (Yaw)	0.0001deg/s rms	
Operation temp. range	-20～+60°C	
Vibration	29.4m/sec^2 rms (5Hz ～ 2kHz) (3G rms)	Random vibration
Shock	20G 10ms	

FUNCTION

FOG & MEMS combined IMU

Item	Remark
Vehicle Speed (VS) Input I/F	RS232C/CAN/Pulse
Power Protection Circuit	✓
GNSS Input I/F	✓
CAN cable termination process	—

USER CONFIGURABLE COMMANDS

FOG & MEMS combined IMU

Function	Explanation
Alignment Compensation	If mounting surface is tilting, its attitude angle can be recognized as a zero (horizontal).
CAN Format, CAN ID allocation	CAN format (standard/extended) and CAN ID allocation can be changed.

There are a lot of other commands except for the above-mentioned. The customer can change various settings.
Please refer to the specification for the details.

Functional block diagram

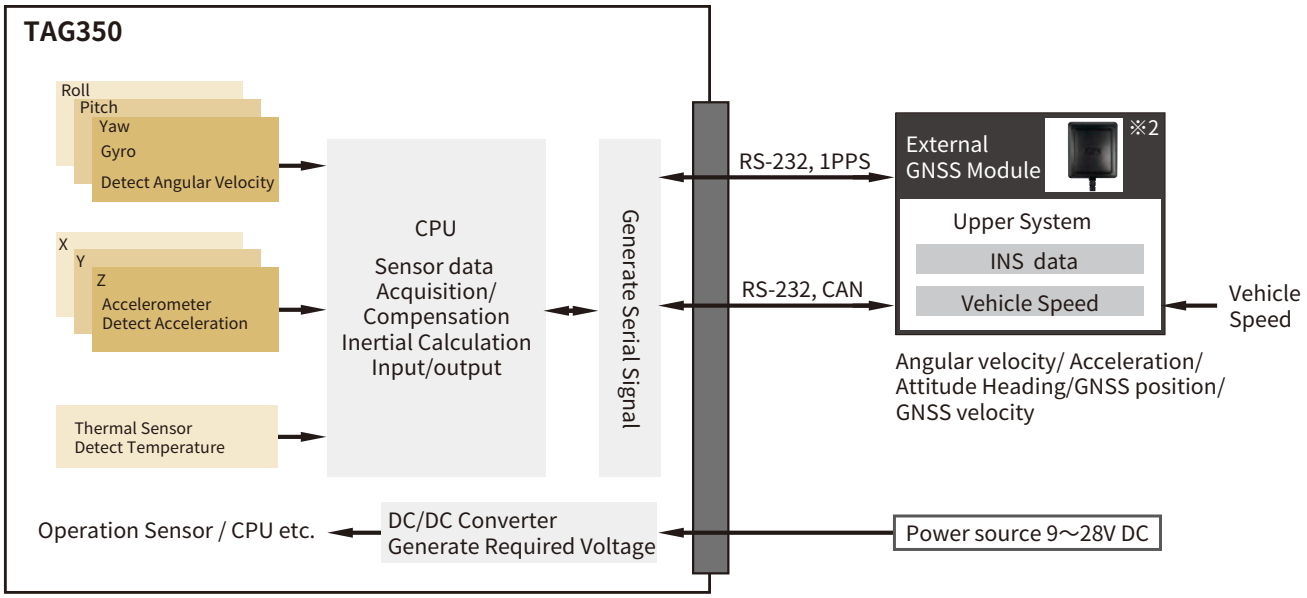

※2 External GNSS Module including cable and antenna is not attached to the product. If required, GNSS module should be prepared by customer.

■Connectable GNSS Module: KGM-810GRB1_PS_917/Position
Regarding the inquiries or purchases, please contact to our sales representative.

TAG350

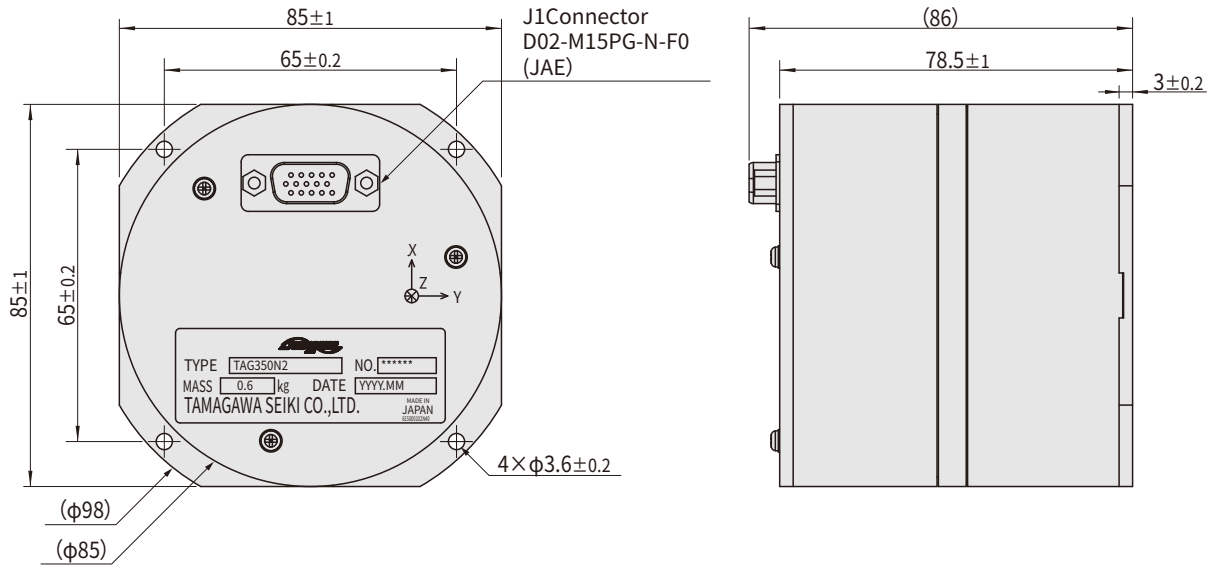

Interface Cable EU8953N1001 (sold separately)

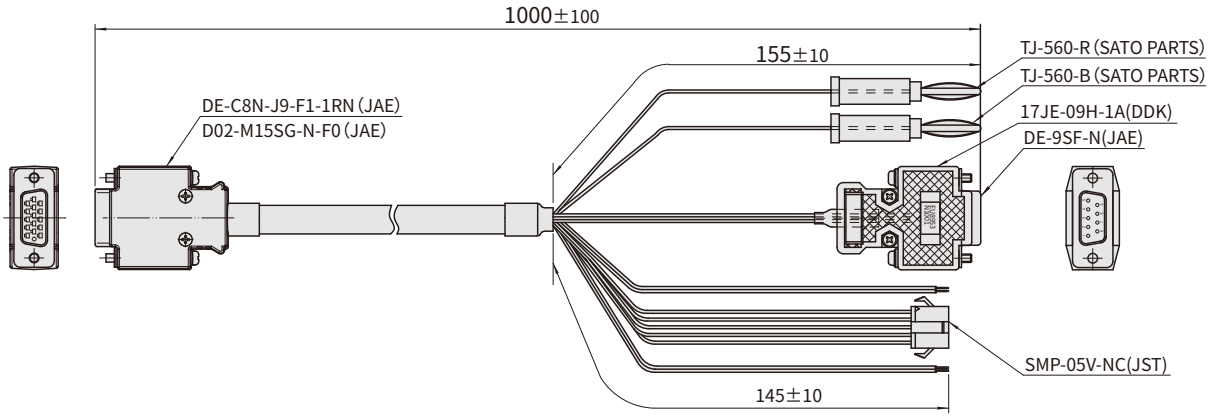

MEMS IMU

AU7684
TAG300
TAG289

We offer 2 types of MEMS IMU (3 axis inertial sensor unit). The one is low cost, but GNSS interface model.
The other is GNSS/INS model with extended Kalman Filter.

FEATURES

01 Attitude Angle <0.1°

02 User-configurable Setting
Definition of Axis, CAN ID Allocation, Offset Cancel, Alignment, etc.

03 Waterproof Case (TAG300 Series)
IP65, M6 Mounting Configuration, 0.5sq Wire Diameter

- Power Protection Circuit
- Vehicle Speed (VS) Input I/F
- Output Cycle: 1kHz
- External GNSS Input I/F
- Extended Kalman Filter + Dead reckoning

Functional block diagram

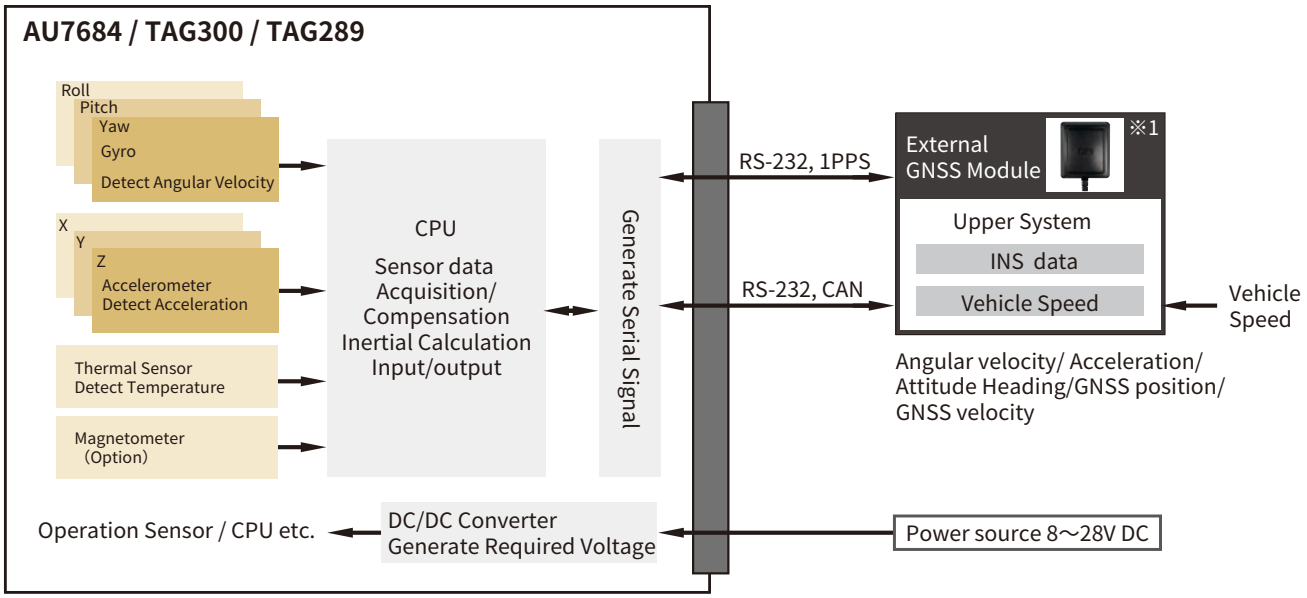

※1 External GNSS Module including cable and antenna is not attached to the product. If required, GNSS module should be prepared by customer.

■Connectable GNSS Module: KGM-810GRB1_PS_917/Position
Regarding the inquiries or purchases, please contact to our sales representative.

PART NUMBER

MEMS IMU

AU7684 (PCB Type)

AU7684N□□□□

Calculation ※2	Accelerometer/Magnetometer	Custom
1: Leveling 2: GNSS/INS/VS combined Navigation	0: Accelerometer±3G 1: Accelerometer±6G 2: Accelerometer±3G/Magnetometer (under development) 3: Accelerometer±6G/Magnetometer (under development)	00:Standard Others: Exclusive

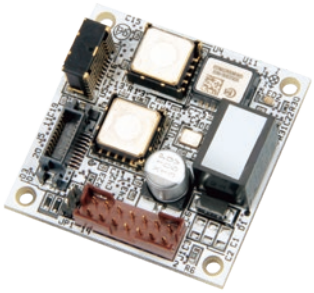

TAG300 (Waterproof Case Type)

TAG300N□□□□

Calculation ※2	Accelerometer/Magnetometer	Custom
1: Leveling 2: GNSS/INS/VS combined Navigation	0: Accelerometer±3G 1: Accelerometer±6G 2: Accelerometer±3G/Magnetometer (under development) 3: Accelerometer±6G/Magnetometer (under development)	00:Standard Others: Exclusive

TAG289 (Case Type)

TAG289N□□□□

Calculation ※2	Accelerometer/Magnetometer	Custom
1: Leveling 2: GNSS/INS/VS combined Navigation	0: Accelerometer±3G 1: Accelerometer±6G	00:Standard Others: Exclusive

※2 Please refer to page 15, 16 for the details of operation mode.

PERFORMANCE

MEMS IMU

Item	Specification	Remark
Dimension (PCB Type)	35 × 35 × 16.1 mm	P/N：AU7684
Dimension (Waterproof Case Type)	100 × 59.8 × 49.5 mm (IP65)	P/N：TAG300
Dimension (Case Type)	64 × 45× 33 mm	P/N：TAG289
Power supply voltage	8 ～ 28V DC	
Interface/ Baud rate	RS232:115.2kbps CAN：500kbps	User can change CAN baud rate
Output Cycle	RS232C：200Hz、CAN：1000Hz	
Gyro Range	± 200deg/sec	
Gyro Bias	0.2deg/sec rms	Room temp.
	± 0.2deg/sec	Ambient temp.
Gyro Scale Factor Error	0.2%FS rms	

Item	Specification	Remark
Acceleration Range	± 3G / ± 6G	Factory setting
Acceleration Bias	0.0196m/sec² rms (2mG)	Room temp.
	0.049m/sec² rms (5mG)	Ambient temp.
Acceleration Scale Factor Error	0.2%FS rms	
Static Accuracy (Roll & Pitch)	0.1deg rms (Range 3G)	Room temp.
	0.2deg rms (Range 3G)	Ambient temp.
In-run Drift (Yaw)	0.01deg/s rms	Offset-cancel applied
Operation temp. range	− 40～+ 85°C	
Vibration	29.4m/sec² rms 5Hz ～ 2kHz	Random vibration
Shock	20G 10ms	

FUNCTION

MEMS IMU

Item	Function	Remark
Waterproof Case	✓	IP65：TAG300
Magnetometer	✓	Under development
Vehicle Speed (VS) Input I/F	RS232 / CAN / Pulse	
Power Protection Circuit	✓	
GNSS Input I/F	✓	Recommendation / Customization
CAN cable termination process	–	

USER CONFIGURABLE COMMANDS

MEMS IMU

Function	Explanation
Alignment Compensation	If mounting surface is tilting, its attitude angle can be recognized as a zero (horizontal).
Definition of Axis	You can select not only Z axis but also X and Y axis as vertical axis.
Update Cycle & Output Cycle	The calculation update cycle & output cycle can be changed.
CAN Format, CAN ID allocation	CAN format (standard/extended) and CAN ID allocation can be changed.

There are a lot of other commands except for the above-mentioned.
The customer can change various settings.Please refer to the specification for the details.

AU7684 (PCB Type)

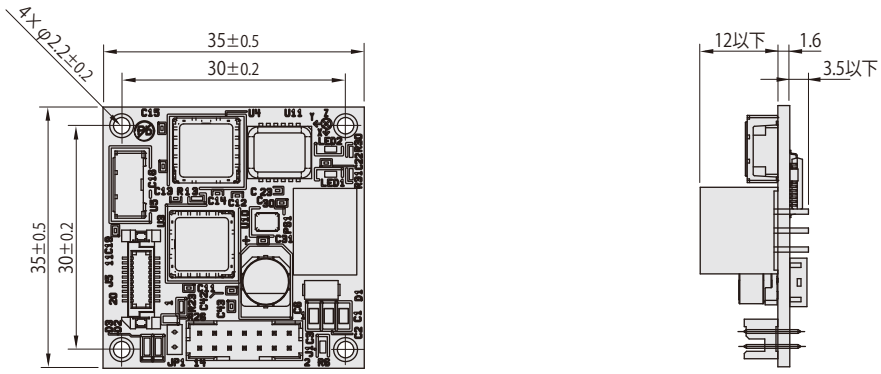

TAG300 (Waterproof Case Type)

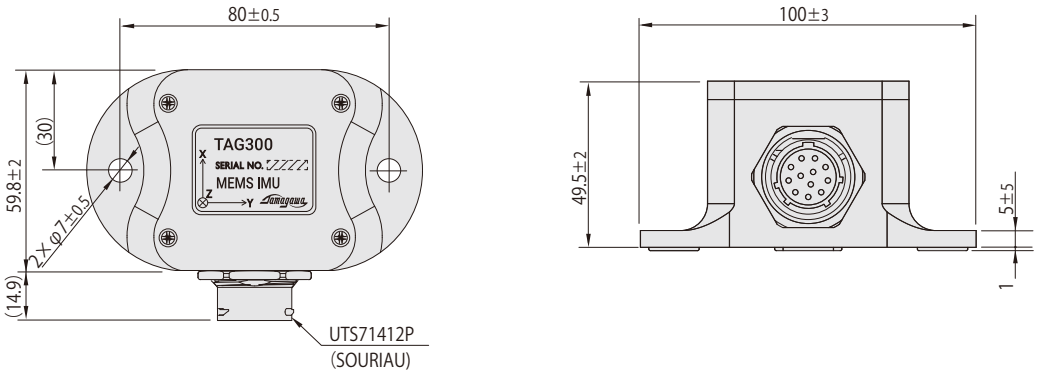

TAG289 (Case Type)

※ Interface cable is attached to TAG289 series.

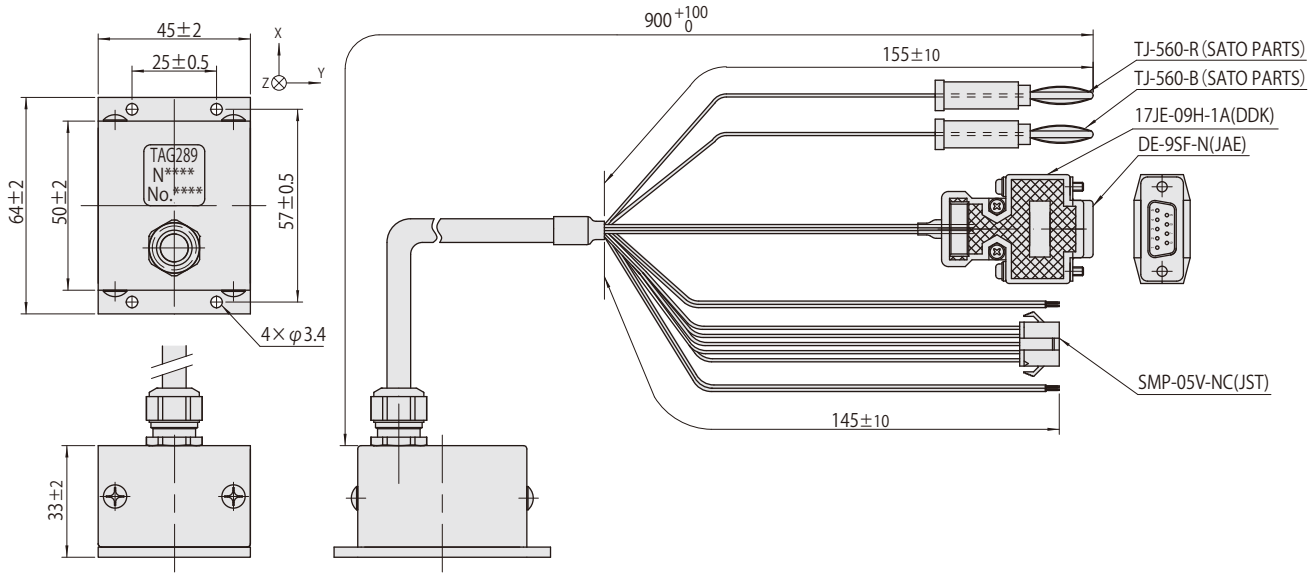

AU7684 Interface Cable EU8937N1000 (sold separately)

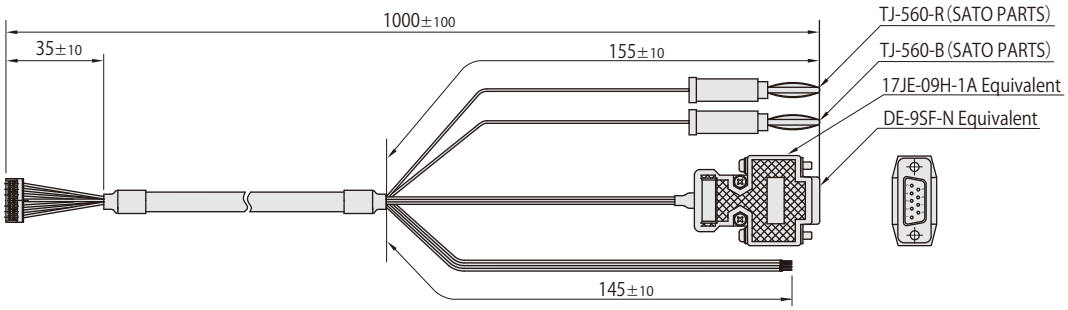

AU7684 Interface Cable・Interface Cable with GNSS connector EU8937N1001 (sold separately)

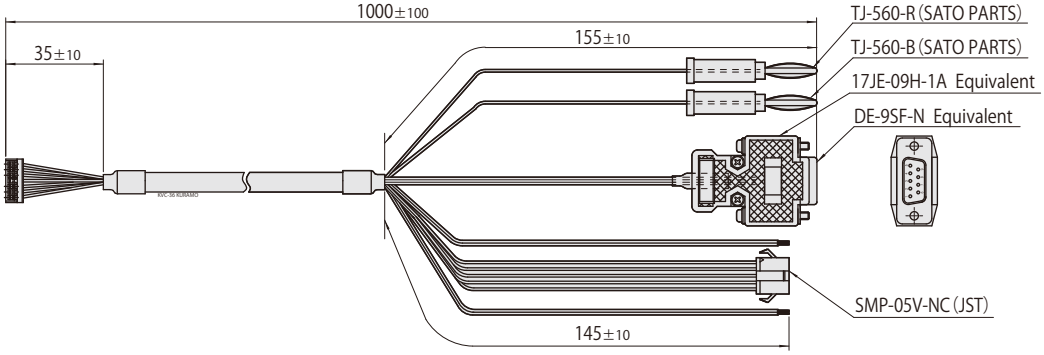

TAG300 Interface Cable EU8940N1000 (sold separately)

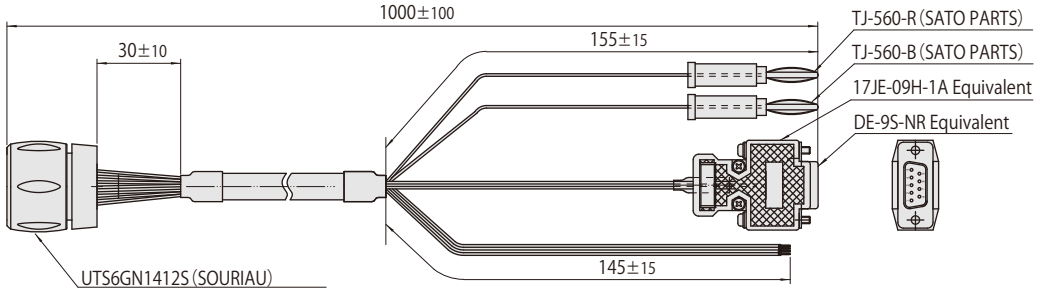

TAG300 Interface Cable・Interface Cable with GNSS connector EU8940N1001 (sold separately)

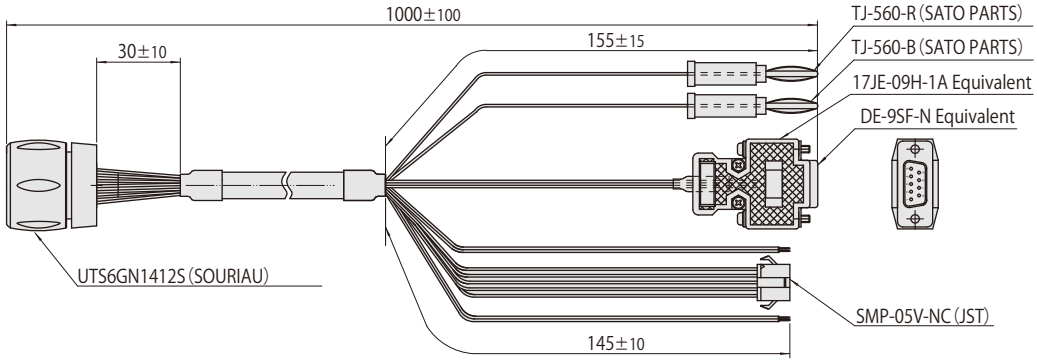

MEMS Gyro Sensor

TAG206N5000
TAG204N5000

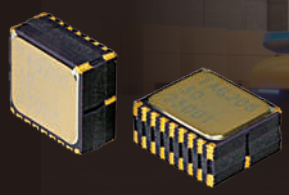

When an oscillating object is rotated, Coriolis Force works in the direction perpendicular to the vibration, and the other vibration occurs.
This induced vibration is detected and converted into voltage proportional to the amplitude of the vibration.

Widespread MEMS Gyro
TAG206N5000

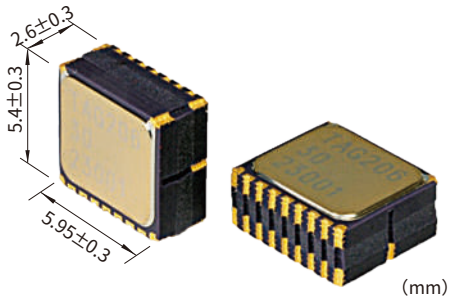

DETECTION

MEMS Gyro Sensor

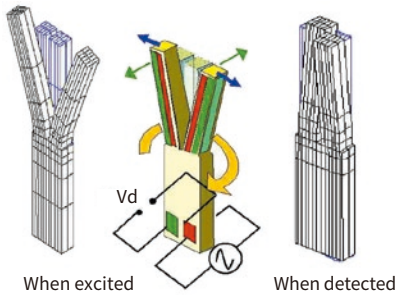

Coriolis Force : $F_0 = 2mv\Omega_0$
Mass : m
Velocity : v

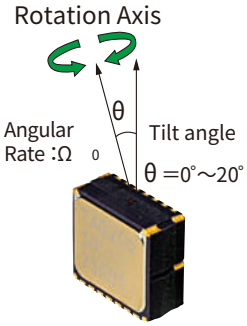

Inclined to the direction of Pin 1

ELECTRICAL SPECIFICATION

MEMS Gyro Sensor

Items	Digital Output				Analog Output				Remark
	MIN	TYP	MAX	Unit	MIN	TYP	MAX	Unit	
Supply Voltage	5V ± 5%			V	5V ± 5%			V	
Consumption Current	9mA Max.			mA	9mA Max.			mA	
Measurement Range	± 60deg/sec			deg/sec	± 60deg/sec			deg/sec	
Sampling Rate	1000Hz			Hz	-			-	
Maximum Output		16383d		-	3.9			V	
Minimum Output		0d		-			0.3	V	
Zero Rate Output	-12		+12	deg/sec	-12		+12	deg/sec	Ta=-40 ~ +85°C Digital Output：8192d is a standard Analog Output：2.1V is a standard
Zero Rate Output with temperature variance	-3		+3	deg/sec	-3		+3	deg/sec	Ta=-40 ~ +85°C
Scale Factor	74	82	90	LSB/deg/sec	16.2	18	19.8	mV/deg/sec	Ta=-40 ~ +85°C
Linearity	-0.5		+0.5	%FS	-0.5		+0.5	%FS	
Scale Factor Variation with Temperature	-2		+2	%	-2		+2	%	
Temperature Output	8102d	8192d	8282d		2.08	2.1	2.12	V	25°C
Scale Factor of Temperature Sensor	-16	-18	-20	LSB/°C	-3.8	-4	-4.2	mV/°C	Ta=-40 ~ +85°C

High Accuracy MEMS Gyro
TAG204N5000

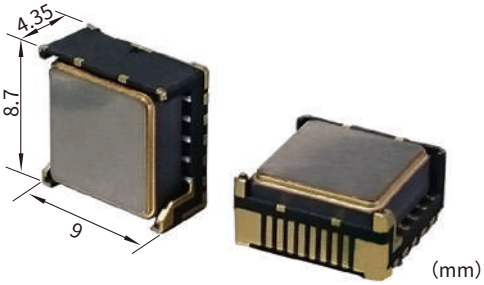

ELECTRICAL SPECIFICATION

MEMS Gyro Sensor

Items	Digital Output				Remark
	MIN	TYP	MAX	Unit	
Supply Voltage	5V ± 5%			V	
Consumption Current	9mA Max.			mA	
Measurement Range	± 60deg/sec			deg/sec	
Sampling Rate	1000Hz			Hz	
Maximum Output		16383d		-	
Minimum Output		0d		-	
Zero Rate Output	-6		+6	deg/sec	Ta=-40 ～ +85°C Digital Output：8192d is a standard
Zero Rate Output with temperature variance	-2		+2	deg/sec	Ta=-40 ～ +85°C
Scale Factor	74	82	90	LSB/deg/sec	Ta=-40 ～ +85°C
Linearity	-0.5		+0.5	%FS	
Scale Factor Variation with Temperature	-2		+2	%	
Temperature Output	8102d	8192d	8282d		25°C
Scale Factor of Temperature Sensor	-16	-18	-20	LSB/°C	Ta=-40 ～ +85°C

IMU Simulator software

In dedicated software is able to graph monitor and data outputs of the IMU's output.
*There are two types of software with GNSS or without GNSS. Please check at the time of your order.

Software can be downloaded free from our HP.
〈MEMS IMU HP〉https://mems.tamagawa-seiki.com/download/

■ Simulator software


2D monitor

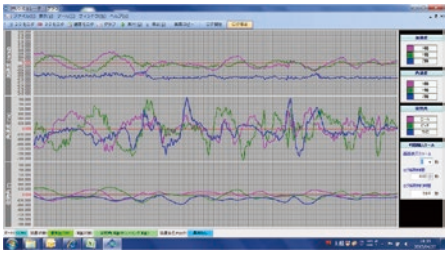
Graph monitor


Graph monitor → Data output

Interferometric Fiber Optic Gyro
i-FOG

TA7774

High accuracy [0.1°/h] Gyro (1-axis), which is a key technology to realize fully autonomous driving.

FEATURES

i-FOG

01 High-accuracy
Achieved [0.1°/h] which is required for fully autonomous driving.

02 Low-price
Our unique technology for winding and Fiber Optical IC realizes cost reduction.

03 Closed-loop Type

i-FOG Promotional Video

See the demonstration of i-FOG localization.

https://www.tamagawa-seiki.co.jp/products/gyro/1-axis-gyro-TA7774.html

i-FOG

CENTIMETER CLASS LOCALIZATION

The accuracy of localization of vehicles is increased to centimeter class by using i-FOG.
It is necessary to maintain the accuracy of localization at centimeter class under GNSS-denied environment.

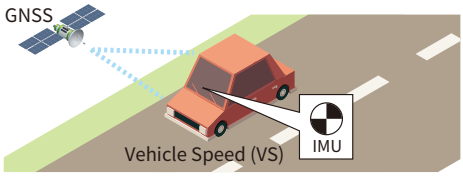

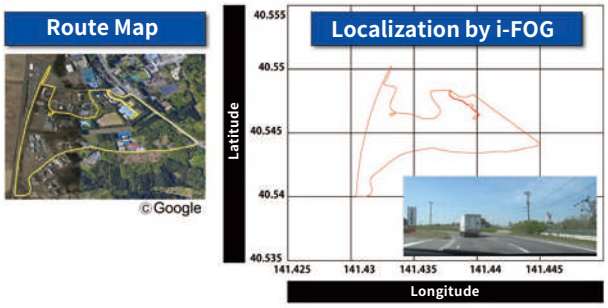

Red line is the track of localization by i-FOG

POSITION ACCURACY BY GYRO ERROR & VEHICLE SPEED

i-FOG

The accuracy of i-FOG (TA7774) is 0.1°/h, which is able to keep high accuracy localization for a certain period of time.

Position Accuracy at 10km/h

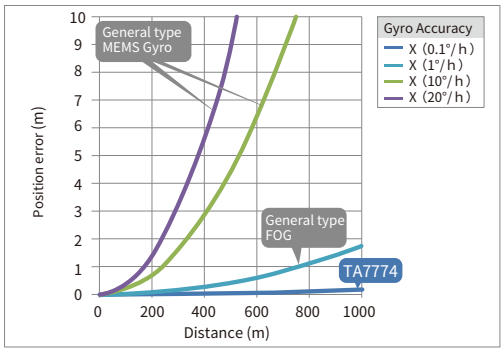

Position Accuracy at 100km/h

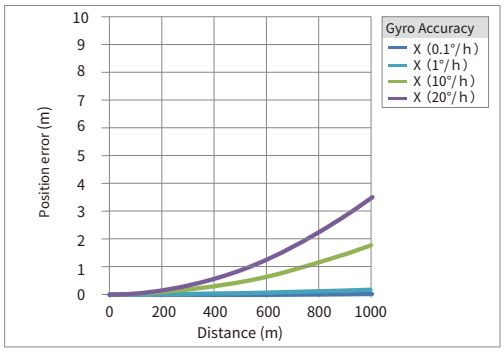

SPECIFICATION i-FOG

Part Number	TA7774
Dynamic Range	±200°/sec
Bias Repeatability	0.1°/h（1δ）（25°C static）
Bias Instability	0.1°/h Max.
Random Walk	0.01°/√h Max.
Scale Factor Accuracy	±100ppm
Scale Factor Linearity	± 100ppm FS
Mass	400g Max.
Power-supply voltage	±5V, ±15V
Power Consumption	±5V：1.5A Max.
	±15V：0.2A Max.
Interface/ Baud rate	RS232：115.2kbps（fixed）
Output Cycle	50Hz
Operating Temperature	−20～+60°C
Non-operating Temperature	−30～+70°C

CONFIGURATION i-FOG

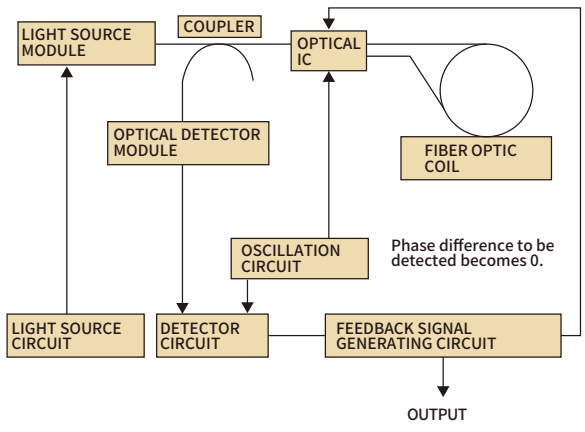

ALLAN VARIANCE i-FOG

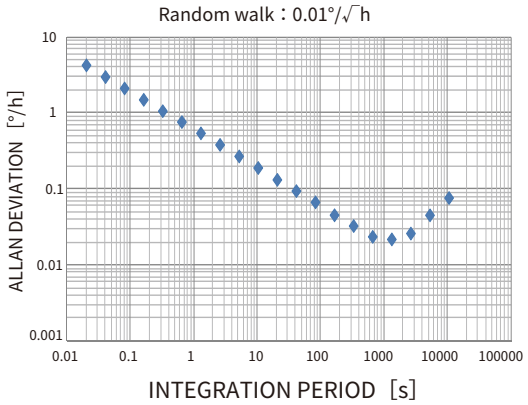

SCALE FACTOR & LINEARITY i-FOG

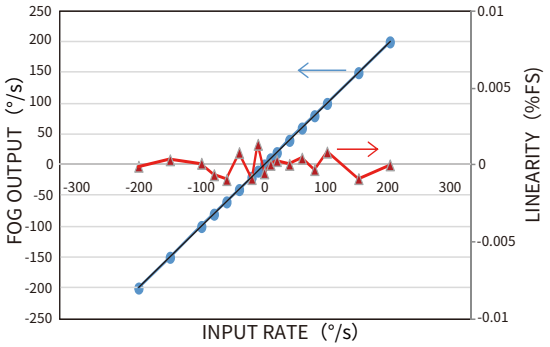

*For more details, contact to our technical support written in the last page.

OUTLINE DRAWING Dimension：mm i-FOG

TA7774

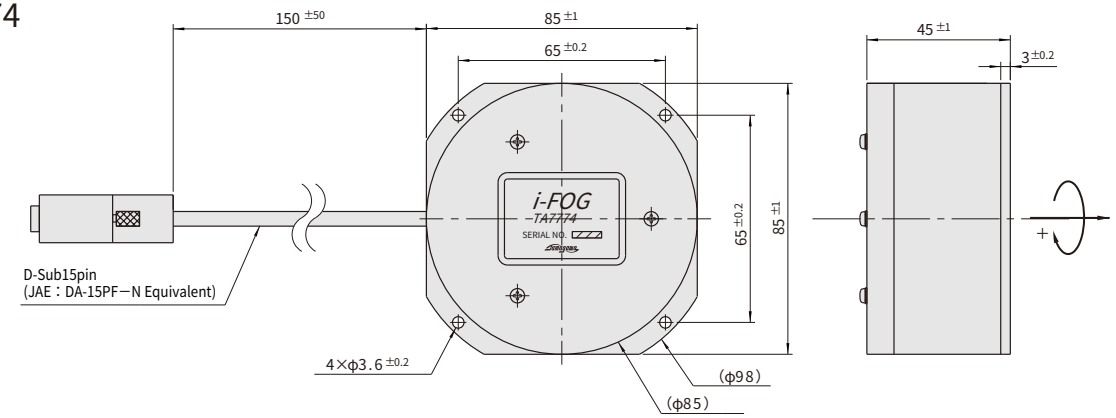

Interface Cable EU8954N1000 (sold separately)

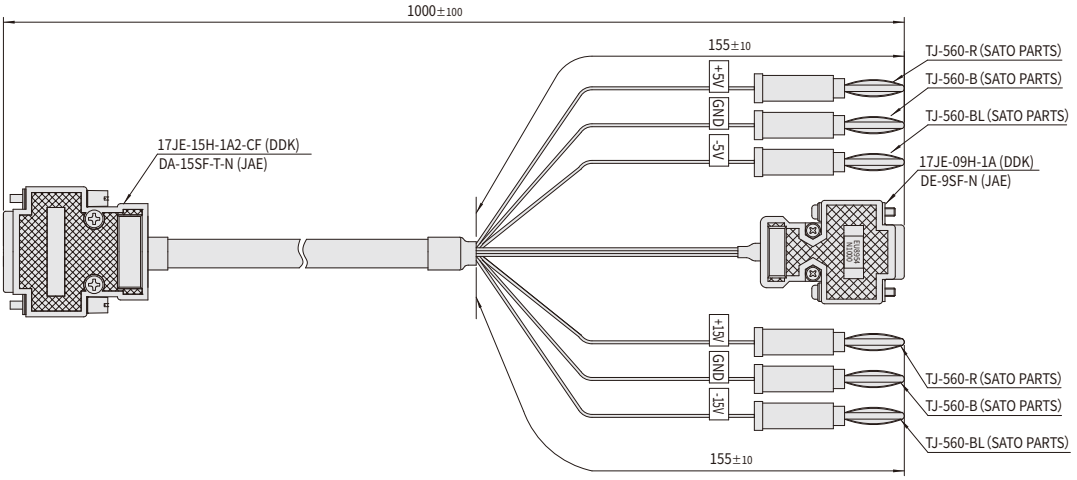

Technology

About Operation Mode

1, Leveling Mode

The feature of Leveling mode is stable output of attitude angle (roll & pitch) by a combination of accelerometers and gyroscopes.
If the device is affected by acceleration or centrifugal force for long hours, the errors of attitude angle may be increased. However, it can be suppressed by a compensation of GNSS and vehicle speed signal input.

Overview, Configuration

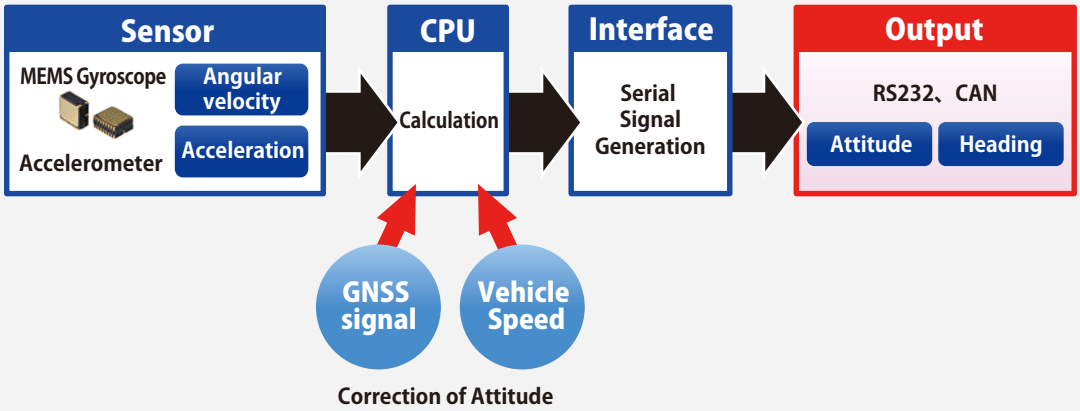

2, GNSS/INS/VS Mode

GNSS/INS/VS is performed by combining gyroscopes angular velocity and accelerometers (INS data), external GNSS data and vehicle speed. In addition to GNSS and vehicle speed data, algorithm (Kalman filter) is used to estimate the error of INS data , and improve accuracy. It is also possible to output the position data even in GNSS-denied environment.

Overview, Configuration

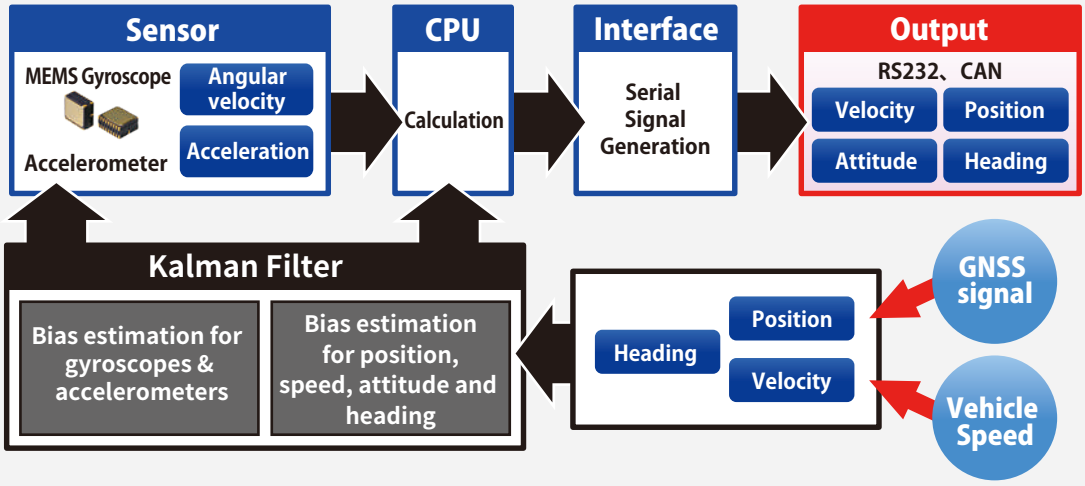

Case Study for GNSS/INS Navigation

Dead Reckoning, a method of calculating position with GNSS/INS combined navigation in GNSS-denied environment such as a tunnel. Please take a look at the demonstration from here.

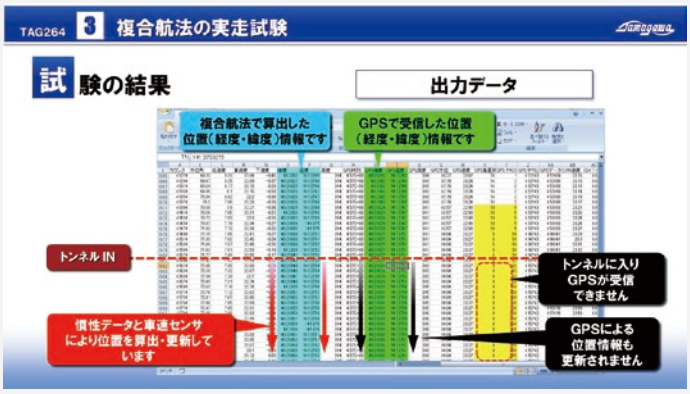

https://mems.tamagawa-seiki.com/product/multisensor.html

3, Leveling VS GNSS/INS/VS

Operation Mode		Leveling		GNSS/INS/VS
GNSS		Disconnected	Connected	Connected *necessary
Output Format	Inertial Sensor • Angular velocity • Acceleration	✓	✓	✓
	Attitude • Heading • Roll • Pitch • Yaw	✓	✓	✓
	GNSS • Latitude • Longitude • Altitude • Velocity • Time • Satellite	–	✓	✓
	Dead-reckoning • Latitude • Longitude • Altitude	–	–	✓
	Estimated Sensor Bias • Angular velocity • Acceleration	–	–	✓
Application		●Measurement of Attitude, Heading ●Motion Sensing ●Vibration ●Monitoring System ●Roll-over prevention Control ●Power Assist		●Localization in GNSS-denied environment (Autonomous-driving, Self-driving) ●High-accuracy measurement of Attitude & Heading

Term	Explanation
Allan Variance	Plot of quotient when the integrated value of gyro output is divided by integral time. It shows a cluster time (averaging time) in a horizontal axis and an Allan deviation (σ) in a vertical axis. We can read the random walk, bias stability etc. from the plot and also represent the noise component of gyro in a graph.
Warm Up	Warming up operation after turning on the power.
Angular Velocity	Change ratio of angle (rotation speed, rotation angle) per unit time.
Acceleration	Change ratio of speed per unit time. The gravity is a kind of the acceleration.
Cross Coupling	Sensitivity against the detection axis by another axis input. Misalignment which indicates direction accuracy is a kind of the cross coupling.
CPS/INS Hybrid Navigation System	Compound navigation of GPS and INS (Inertial Navigation System). Technology for high accuracy and stable navigation. The error estimation of inertial sensor by Kalman filter improves the accuracy.
Scale Factor	Ratio of sensor output changed by input. It is also called sensitivity (Sensitivity is distinguished from scale in the IEC standard).
Sensor Fusion	By compounding data from several sensors, improve the measurement reliability of the unit or complement defects of each sensor.
Sensor Data Correction	To correct the error which each sensor has.
Dynamic Range	Measurable range of a sensor from minimum to maximum of a motion. The reciprocal of a dynamic range is a scale factor.
Dead Reckoning (Autonomous Navigation)	Technology of position measurement with high accuracy even in a tunnel without GPS signal by the compound arithmetic procession of the information from gyro sensor, accelerometer etc.
Drift	Drift is the indication of bias variation size under the influence of environmental condition such as temperature (rise or fall), power supply variation or vibration. There is also a successive change shifting slowly.
Bias	Deviation from ideal center. Difference between output in a stationary state and ideal zero. It is also called zero point bias or offset. It becomes an element of the error (integration error) in case of angle calculation.
Fiber Optic Gyro	Turn the optical fibers like a coil in CW and CCW and input light to both directions. By the interference of the output, the wavelength is changed due to Doppler effect according to the motion (red and blue shift). A gyroscope which detects and outputs the change amount.
MEMS	MEMS is the abbreviation of Micro Electro Mechanical Systems and the general term indicates the technology to build micro mechanical mechanism of nano-level or micron-level by using semiconductor manufacturing equipment.
MEMS Gyro	Sensor making use of MEMS technology which detects the acceleration by using inertial force (Coriolis force) coming from vibration or rotation.
Random Walk	Digitalized value of degree of variation (white noise). It is considered to be the noise which a sensor has.
Leveling Calculation	Inertial operating algorithm of MEMS-IMU (IMU consists of MEMS gyros and MEMS accelerometers) made by Tamagawa. It enables a high precision dynamic posture measurement to a low cost (low accuracy) gyro.

MEMO

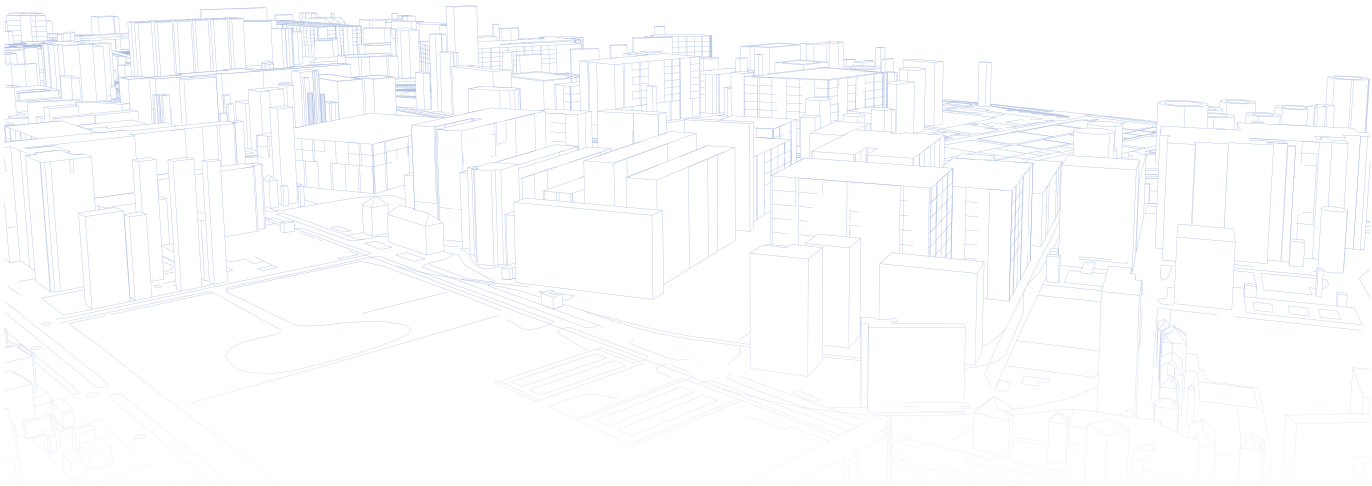

WARRANTY

When ordering, please contact our Sales Department as the contents of this catalog are subject to change without notice.

The outline of operation and the examples of an application circuit indicated in this catalog are only showing standard operation and usage of electronic components and do not guarantee the operation by actually used equipment. Therefore, please design equipment at your own risk in case you use our products. We cannot take responsibility for damages resulting from the use of our products.

The technical information containing the outline of operation and circuit diagram indicated in this catalog does not mean consent of intellectual property rights, such as patent right of our company or a third party, and copy right. Moreover, it does not guarantee that enforcement of a third party's intellectual property rights or other rights can be performed. Therefore, we do not take responsibility for the infringement of a third party's intellectual property rights or other rights resulting from the use of our technical information.

Products shown in this catalog are designed and manufactured with an object for general use, such as the ordinary industrial use, general office work, and personal/home use. They are not designed and manufactured for the use which requires high reliability (under-water stations and space satellites), and the use which requires high safety and if the safety is not secured, it has serious influence socially and directly onto life and body (nuclear reaction control in nuclear facilities, airplane automatic flight control, air traffic control, traffic control in a mass transportation system, medical equipment for life maintenance, and missile launch control in an arms system). Therefore those who are considering use of our products in these fields are advised to consult our Sales Department in advance. We cannot take responsibility for damages resulting from the failure in the consultation.

Failure of electronic components occurs in a certain probability. So we request you to establish safety designs, such as a redundant design of equipment, a design to prevent spread of a fire, an over-current prevention design, and a malfunction prevention design, even if the electronic components should break down so that an accident resulting in injury or death, a fire accident, and social damage may not take place.

In case our product in this catalog corresponds to a cargo or technology regulated based on "a foreign exchange and a foreign trade law", the permission based on the law is required in exporting the product.

TAMAGAWA TRADING CO., LTD.

A COMPANY OF TAMAGAWA SEIKI CO., LTD.

International Marketing Sales Department

Head quarters:
1-3-1 Haba-cho, Iida, Nagano Pref. 395-0063 Japan
PHONE : +81-265-56-5423
FAX : +81-265-56-5427

Motortronics® Ideas make technology fun

https://mems.tamagawa-seiki.com/en/

'20.09

T12-1721N2

This catalogue is current as of September 2020.
ALL specifications are subject to change without notice